Portable Greasing System

GS-5

Fully Portable & single person operation manual greasing system designed for volume greasing in workshop environments, site applications, on a pick-up truck, tractor, earth moving equipments etc.

Pump is operated by foot press of the spring loaded system

A single charge provides upto 30 shots of grease

Aluminium die cast super gun develops greasing pressure and has high pressure & high volume setting

High pressure feature is very useful to open blocked grease fittings

Pump assembly is fully sealed to prevent contamination

Pump comes complete with drum cover, rubber lined follower plate, premium 1/2" ID high pressure hose, Super gun fitted with steel extension & coupler and 11 lb. (5 Kg) plastic grease bucket

WETTED COMPONENTS

Aluminium, Steel, Brass, Polyurethane & Nitrile Rubber

RECOMMENDED USE

For Grease upto and including NLGI No. 2

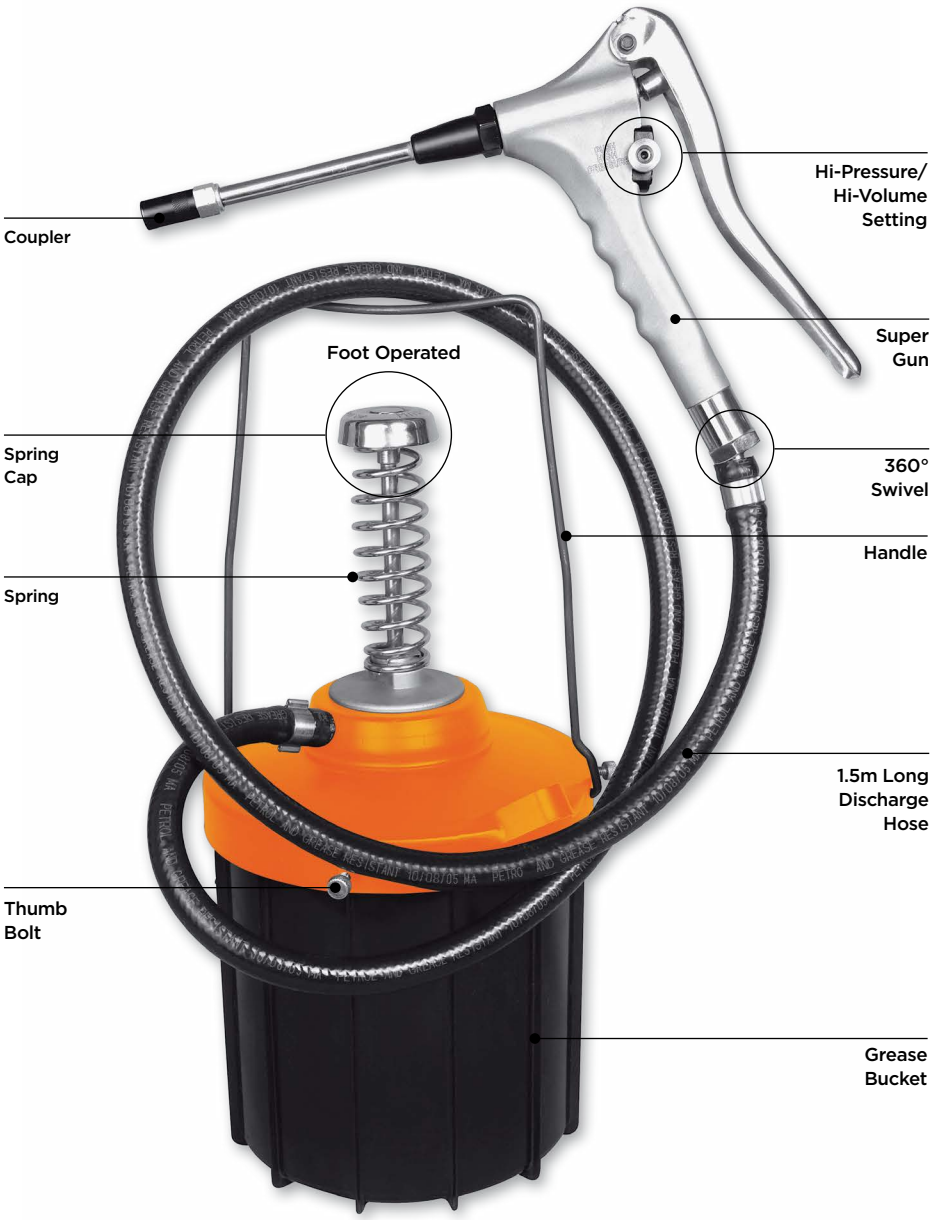

FEATURES

DEVELOPS	DELIVERS
10,000 PSI (690 BAR)	UPTO 1.25 GM/STROKE ON HIGH VOLUME SETTING

SPECIFICATIONS

BUCKET CAPACITY	5 Kg / 11 lb.
HOSE LENGTH	1.5m
GREASE DISCHARGE (HIGH VOLUME SETTING)	1.25 gms.
PRESSURE DEVELOPED (HI-PRESSURE SETTING)	10,000 PSI
REPAIR KIT	
KIT/RPR/K6-67	Pump seal kit
KIT/RPR/SEL/K6-67	Pump Seal Kit
KIT/RPR/KR	Overhauling Kit for Super gun
KIT/RPR/PST/KR	Piston unit Kit for Super gun

INSTALLATION

1. Loosen the 3 thumb bolts from the drum cover & remove the pump assembly from the grease bucket along with follower plate

2. Fill the grease bucket with bulk grease. The bucket can hold upto a maximum of 5 Kgs (11 lbs) of grease. Fill the Grease in the bucket approx. 1"(25 mm) below the rim.

3. Bump the bucket base few times to consolidate the grease & help remove trapped air

4. Insert the follower plate in the grease container with the follower Boss facing upward. Push down firmly onto the grease until grease emerges through the Follower Boss in the centre of the plate

5. Now take the pump assembly & push the pump tube through the follower plate centre and push it down until the drum cover sits on the rim of the grease bucket. Hand-tighten the 3 thumb bolts evenly under the rim of the grease bucket.

6. When using the pump for the first time or after an extended period of time, it requires initial priming. This is achieved through pushing the spring cap down several times with your foot to start grease flowing through the grease hose. When the hose is full of grease, the spring cap will stay down.

7. Press the super gun trigger & hold it with the pistol handle pressed, in order to bleed out trapped air out of the system. When fully bleed, grease will emerge from the coupler fitted onto the super gun

8. After completing the above Assembly instructions, the pump is now ready for use

NOTE: Grease must travel through the entire length of the hose to accomplish full bleeding and it may be necessary to repeat step 7 above. If the unit fails to prime, bump the grease bucket several times on a solid surface, to settle the grease

OPERATING INSTRUCTIONS

1. While greasing, the Spring Cap will rise slowly. When the Spring Cap is fully up & the gun loses pressure, push the spring cap down once or twice to re prime the pump & continue the greasing

2. Each time the pump primed will provide sufficient grease for upto 30 shots of grease

HI-PRESSURE/ HI-VOLUME SETTING

The Super Gun has a Switch which can be pressed from either side for Hi Volume flow or Hi Pressure Grease Discharge. In Normal application the Super Gun is operated on the HI-VOLUME setting. At HI-VOLUME setting the grease discharge is 1.25 gm / stroke & pressure will be 5,000 PSI. HI-PRESSURE setting will be required to clear a blocked or seized grease nipple, simply push the switch on the gun to the HI-PRESSURE position.

At HI-PRESSURE setting the is 10,000 PSI and the discharge will be 0.45 gm/stroke.

CAUTION

When replacing the hose assembly, only use a genuine replacement part. Failure to do so may result in damage to the pump

Dirt & foreign matter (lint, etc.) can seriously affect the operation of this unit. Make sure you use only clean grease & the pump assembly is always sealed

GREASING A GREASE FITTING / GREASE NIPPLE:

1. The grease coupler provided at the end of the Super gun extension has a jaw type construction. The coupler jaws will snap on to a grease fitting and maintain a tight fit.

2. When connecting the coupler to the grease fitting, press the coupler straight onto the grease fitting to form a snug fit. Start operating the Super gun with the coupler as square to the grease fitting as possible.

3. Once greasing is completed, slightly tilt the coupler, twist and pull back. The tilt and twist action will allow easy removal of the coupler from the grease fitting.

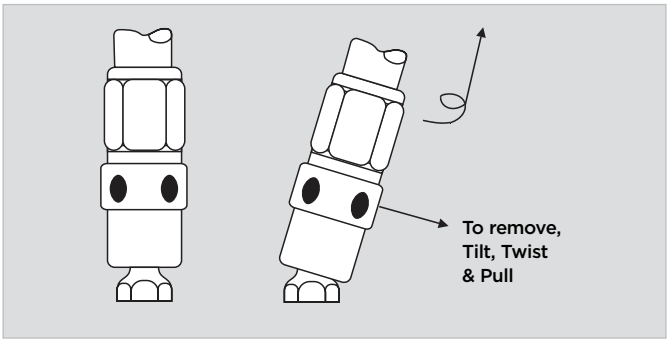

MAINTENANCE

Pump assembly should be kept clean and checked for damage before each use. Using clean grease will give you years of trouble free use

EXPLODED VIEW

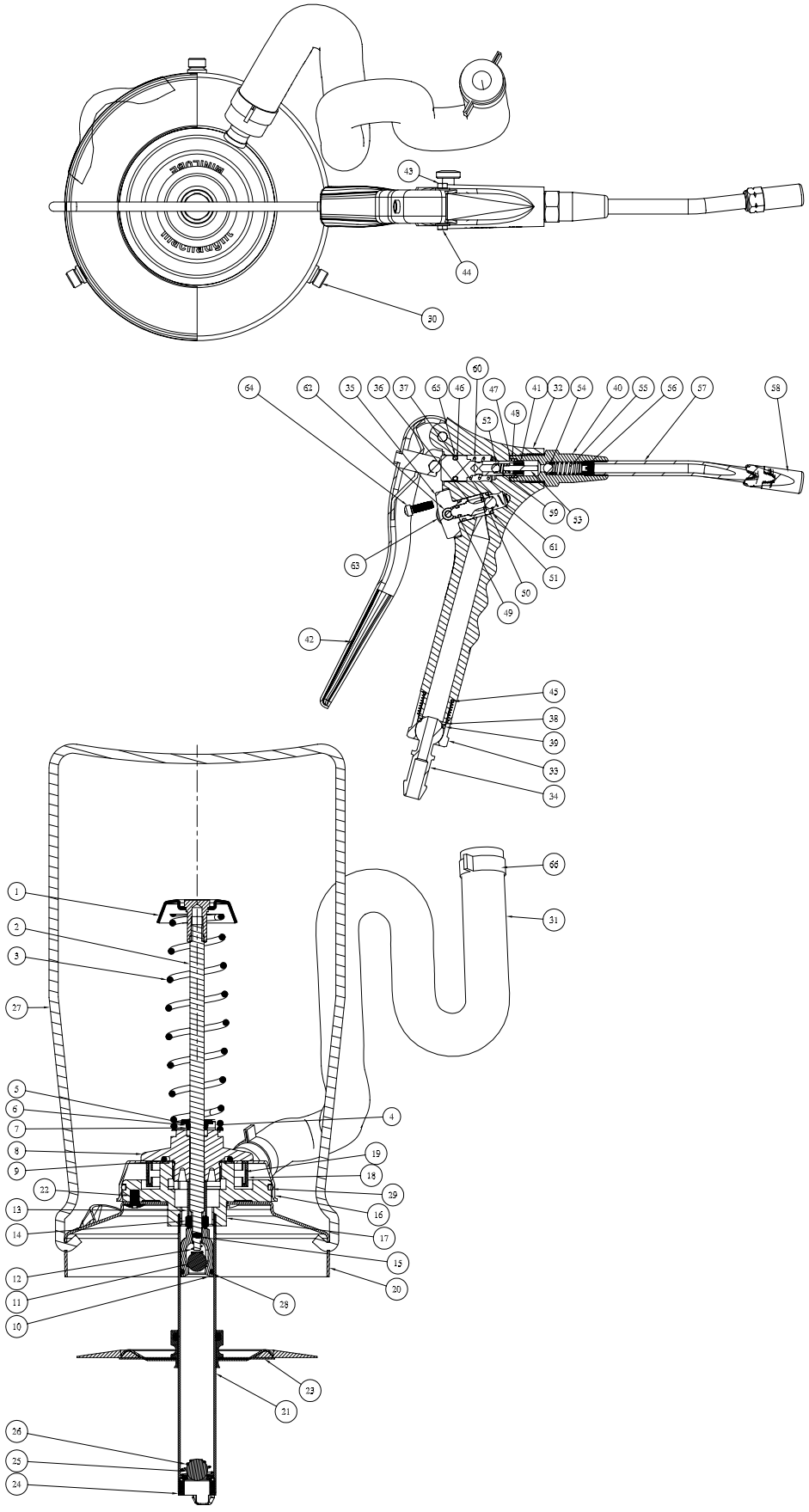

PARTS LIST

REF. NO.	PARTS DESCRIPTION	QTY.
1	Rod Cap Assembly	1
2	Piston Rod	1
3	Pump Spring	1
4	Retainer Cap	1
5	Washer	1
6	Back up Washer	1
7	O-Ring	1
8	Clamp Nut	1
9	O-Ring	1
10	Piston	1
11	Steel Ball Dia. 1/2"	1
12	Inlet Check Spring	1
13	Spacer	1
14	Lock Nut	1
15	Slotted Spring Pin	1
16	Sub. Assembly of Strainer Cover	1
17	Strainer Container	1
18	Filter Bracket	2
19	Filter	1
20	Lid Base Assembly Semi Finish	1
21	Pump Tube	1
22	Slotted Gutter Bolt	3
23	Follower Assembly	1
24	Foot Valve	1
25	Steel Ball Dia. 9/16"	1
26	Ball Retainer Spring	1
27	Handle	1
28	O-Ring	1
29	O-Ring	1
30	Thumb Screw	3
31	Hose	1
32	Body	1
33	Ball Socket Retainer	1
34	Ball End Hose Adaptor	1
35	Control Body	1
36	Operating Plunger	1
37	Steel Ball Dia. 5/16"	1
38	Washer	1
39	O-Ring	1
40	Outlet Body	1
41	Piston	1
42	Handle Assembly	1
43	Rivet	1
44	Pivot Screw	1
45	O-Ring	1
46	O-Ring	1
47	Backup Washer	2

REF. NO.	PARTS DESCRIPTION	QTY.
48	O-Ring	1
49	O-Ring	1
50	Valve Seat	1
51	O-Ring	2
52	Steel Ball 7/32"	1
53	Valve Stem	1
54	Steel Ball 1/4"	1
55	Outlet Ball Spring	1
56	Spring Keeper Screw	1
57	Bend Pipe	1
58	Hydraulic Coupler	1
59	Piston Check Spring	1
60	Piston Spring	1
61	Inlet Check Spring	1
62	Control Push Rod	1
63	Control Push Rod End	1
64	Fillister HD. Taptite	2
65	GLYD Ring	1
66	O-Clip	2

REPAIR PARTS LIST

SR. NO.	PARTS DESCRIPTION	QTY.	SUPPLY CONDITION
KIT/RPR/K6-67			
1	Back up Washer	1	Loose
2	Clamp nut	1	
3	Filter Bracket	2	
4	Inlet Check Spring	1	
5	O-Ring	1	
6	O-Ring	1	
7	O-Ring	1	
8	O-Ring	1	
9	Piston	1	
10	Retainer Cap	1	
11	Pump Spring	1	
12	Piston Rod	1	Assembled
13	Rod Cap	1	
14	Rod Cap Insert	1	Loose
15	Slotted Spring Pin	1	
16	Steel Ball Dia 1/2"	1	
17	Strainer Container	1	
18	Sub Assembly of Strainer Cover	1	
19	Washer	1	
KIT/RPR/SEL/K6-67			
1	Back up Washer	1	Loose
2	Ball Retainer Spring	1	
3	Filter Bracket	2	
4	Foot Vlave	1	
5	Inlet Check Spring	1	
6	O-Ring	1	
7	O-Ring	1	
8	O-Ring	1	
9	O-Ring	1	
10	O-Ring	1	
11	Steel Ball	1	
12	Steel Ball	1	
13	Thumb Screw	3	

SR. NO.	PARTS DESCRIPTION	QTY.	SUPPLY CONDITION
KIT/RPR/KR			
1	GLYD Ring	1	Assembled
2	O-Ring	1	
3	Piston	1	
4	Steel Ball	1	
5	Piston Check Spring	1	
6	Valve Stem	1	
7	O-Ring	1	Loose
8	O-Ring	1	
9	O-Ring	2	
10	O-Ring	1	
11	O-Ring	1	
12	Steel Ball	1	
13	Steel Ball	1	
14	Spring Keeper Screw	1	
15	Inlet Check Spring	1	
16	Outlet Ball Spring	1	
17	Valve Seat	1	
18	Washer	1	
19	Back up Washer	2	
20	Rivet	1	
21	Pivot Screw	1	
22	Piston Spring	1	
KIT/RPR/PST/KR			
1	GLYD Ring	1	Assembled
2	O-Ring	1	
3	Piston	1	
4	Steel Ball	1	
5	Piston Check Spring	1	
6	Valve Stem	1	
7	Rivet	1	Loose
8	Pivot Screw	1	
9	Piston Spring	1	

TROUBLESHOOTING

PROBLEM	CAUSE	SOLUTION
The spring cap rises up & the unit will not pump grease	1. Air lock in the grease caused by a dent in the container stopping the follower or a damaged follower O Ring	1. Remove the dents or tilt the follower under the dent. If the Follower O Ring is damaged, replace the O Ring
	2. Grease Bucket empty	2. Refill the grease bucket
	3. The foot valve assembly at the bottom of the suction tube is faulty	3. Replace with a new foot valve assembly
The spring cap stays down, but the unit will not pump grease	1. Grade of grease is too heavy	1. Use NLGI No.2 Grease, or lighter
	2. The strainer in the drum cover just below the compression spring is blocked.	2. Clean/ replace the strainer.

Groz Engineering Tools (P) Ltd.
Groz Net Industries

Village Kherki Daula, National Highway-8,
Gurgaon-122001, Haryana, INDIA

Tel +91.124.282.7734/40, 2827777
Fax +91.124.2827980, 2827986
E-Mail info@groz-tools.com
Url www.groz-tools.com

The GROZ name, GROZ logo and the mark are
trademarks of Groz Engineering Tools (P) Ltd., India